UK P&I CLUB

Technical Bulletin

NUMBER 22 2006

Sulphur oxide emissions

Annex VI, regulation 14, of Marpol dealing with the emission of sulphur oxides became effective from May 2006

Ship operators should be aware of Annex VI of Marpol which refers to regulations for the prevention of air pollution from ships and, in particular, regulation 14 which deals with the emission of sulphur oxides (SOx), which entered into force in May 2005 and into effect from May 2006.

The sulphur content of any fuel oil used on board shall not exceed 4.5% by mass. Suppliers of marine fuels must be vetted by the authorities of the country in which they operate. The supplier must provide a representative fuel sample obtained using a continuous drip sampler from the bunker manifold, together with a bunker receipt, stating the percentage of sulphur content of the fuel supplied.

SOx emission control areas (SECAs) are also set up, in the Baltic and North Sea including the English Channel, where the sulphur content of fuel burnt must not exceed 1.5% by mass. The Baltic SECA has been enforced from May 2006, the North Sea and English Channel SECA is due to enter into force in November 2006 and will be enforced for IMO purposes from November 2007. However the EU, under EU directive 2005/33/EC, has begun unilaterally to enforce the requirement for <1.5% sulphur fuel to be used in all member states waters for passenger vessels on regular services to or from EU ports from 11 August 2006. And this legislation will apply to all vessels in EU waters falling within an IMO designated SOx emission control area from the 11 August 2007.

As an alternative to using <1.5% sulphur fuel in such areas an approved exhaust gas cleaning system to reduce the total emission of sulphur oxides from the ship may be used. However, the fitting of an exhaust gas cleaning system may give rise to operational problems. The discharge of 'waste streams' (wash water, etc.) from the equipment is forbidden in ports, harbours and estuaries. Such waste can only be discharged at sea on passage. Therefore provision must be made to retain waste water in a tank on board in harbour, which may be difficult to achieve economically.

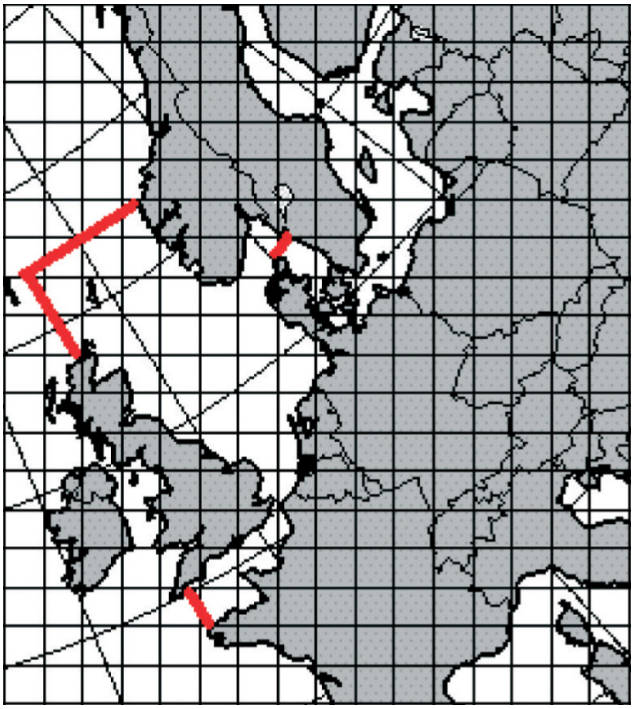

Geographical boundaries for the Baltic Sea SECA and the North Sea Area and the English Channel SECA

To comply with the new regulations owners/operators must choose which system they will use:

1. Supply all fuels of <1.5% sulphur content to their vessels at all times.

2. Use both types of fuel and change over from <4.5% to <1.5% sulphur content fuel prior to entering a SECA (or EU Control Area [EUCA]).

3. Fit the approved exhaust gas cleaning system.

It is anticipated that almost all vessels will continue to operate on <4.5% sulphur fuels outside SECAs and EUCAs, these ships will need to use option 2 above prior to entry into control areas. The regulations require that ships using both fuel types must allow sufficient time for the fuel oil service system to be fully flushed of all fuel exceeding 1.5% sulphur prior to entry into a SECA (or EUCA).

DNV has recently published a very good guidance article entitled 'MARPOL Annex VI, Operation in SOx Emission Control Areas, how to comply'. Use the link below[1] to view the guidance and other related documents.

According to DNV the time it will take to ensure a full change over to <1.5% sulphur fuel is a function of:

- Sulphur content in high and low sulphur fuel oil.
- Amount of high sulphur fuel between the first point of blending and the engine inlet, i.e. blending volume.
- Fuel oil consumption rate.

This is shown as a graph, illustrated opposite, and the optimal fuel storage system to effect the most economical changeover is also diagrammatically represented from the same source material.

In addition to the above IMO has, in July 2005, issued guidance to PSC inspectors under MEPC/Circ.472. This guidance is freely available on the IMO website[2] and we would advise owners/operators to make crews aware of the full content of this guidance.

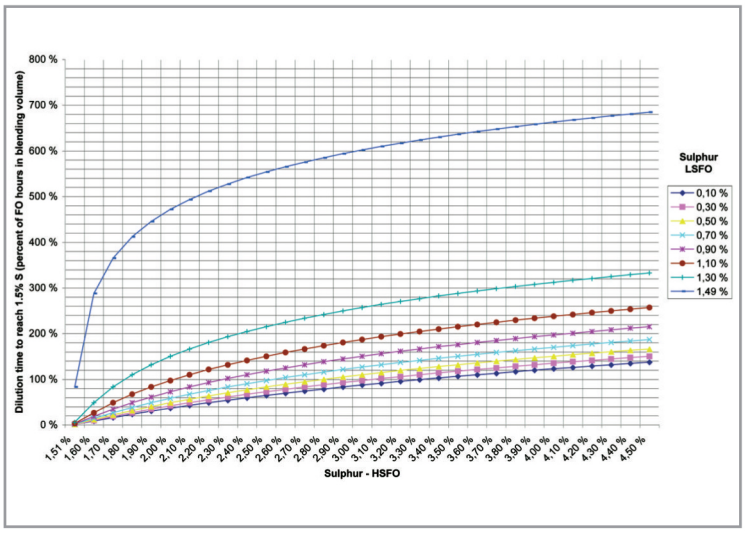

Courtesy DNV

Dilution time to reach 1.5% S in percent of the fuel oil hours contained in the blending volume

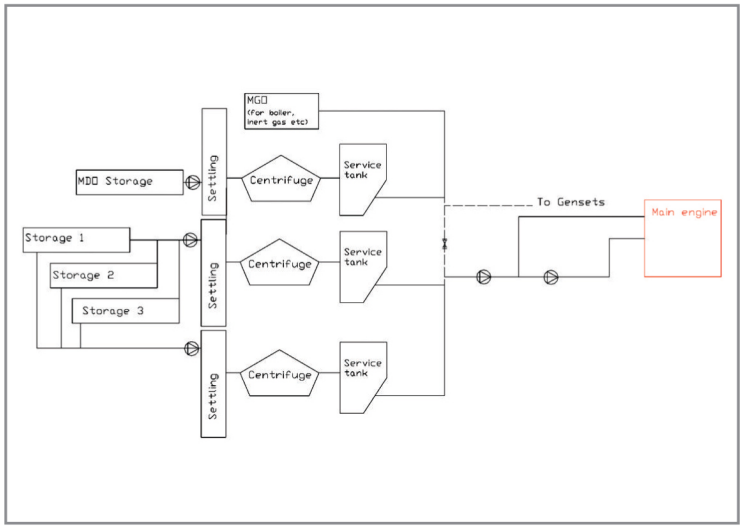

Courtesy DNV

The optimal fuel oil system for switching to low sulphur fuel oil (LSFO)

Weblinks for further information:

1. DNV article – Operation in SOX Emission Control Areas, how to comply
   www.ukpandi.com/ukpandi/resource.nsf/Files/DNV-MARPOLAnnexVI-SECA/$FILE/DNV-MARPOLAnnexVI-SECA.pdf

2. IMO Circular – Guidelines for Port State Control under Marpol Annex VI
   www.ukpandi.com/ukpandi/resource.nsf/Files/MEPC472/$FILE/MEPC472.pdf

For further information please contact:
Loss Prevention Department, Thomas Miller P&I Ltd
Tel: +44 20 7204 2307. Fax +44 20 7283 6517
Email: lossprevention.ukclub@thomasmiller.com